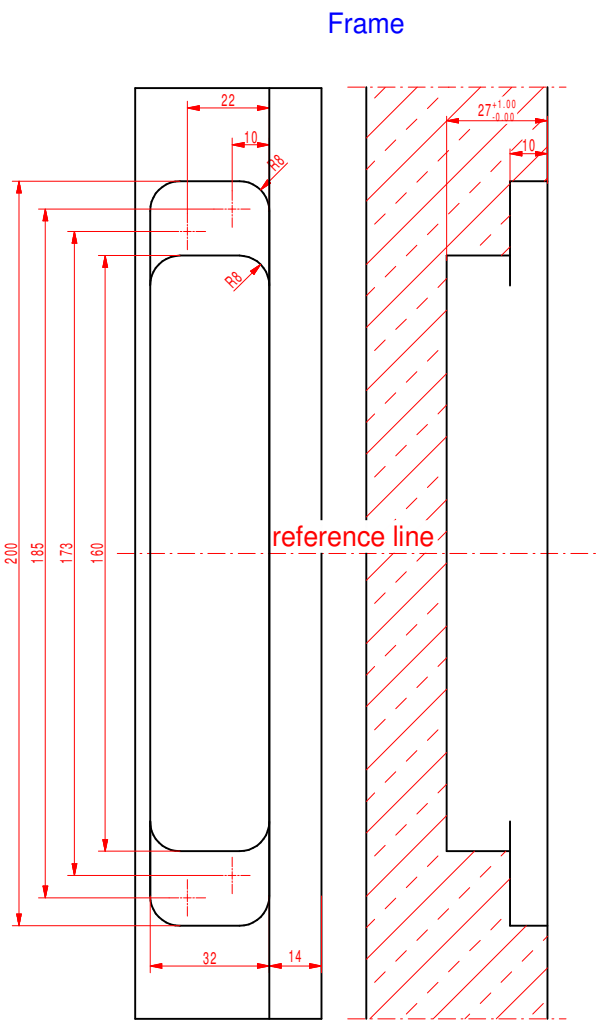

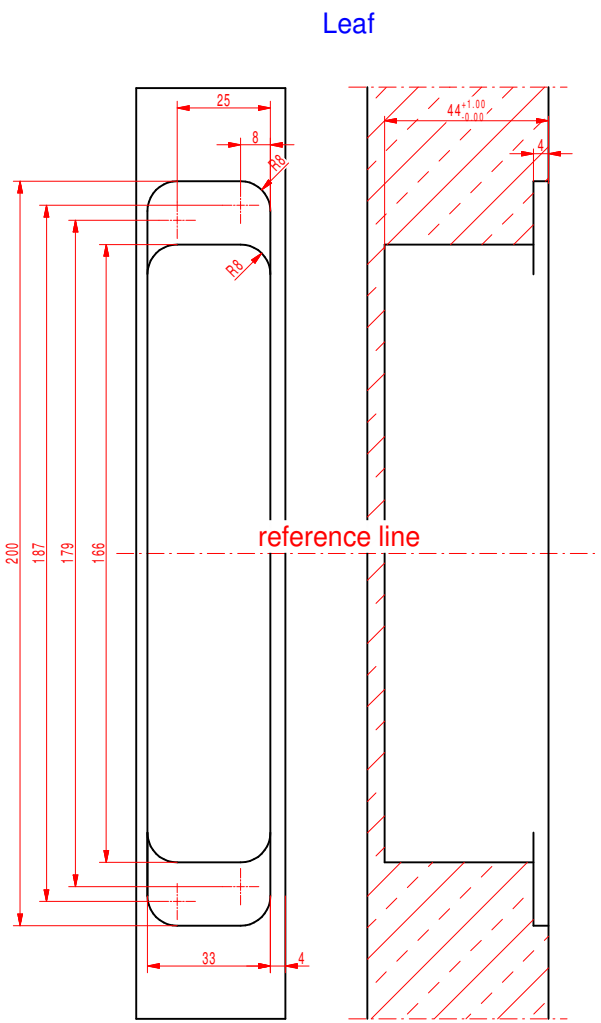

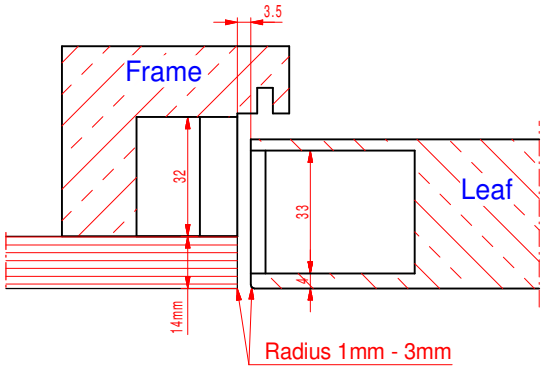

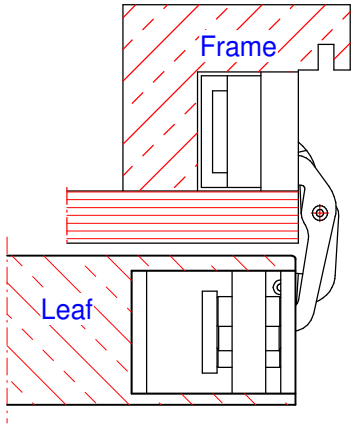

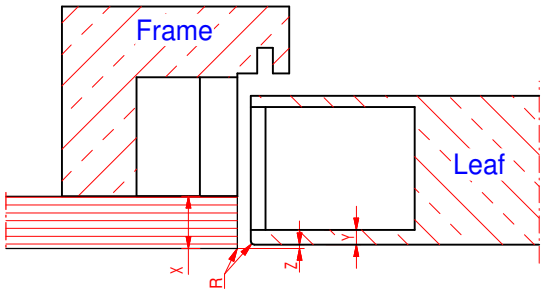

Cutout ratio

Frame (X)	Leaf (Y)	Distance (Z)	Radius (R)
14 mm	4 mm	0 mm	0 mm
15 mm	4 mm	1 mm	2 mm

Please note that the cut-out ratios become more unfavourable downward in the table with the effect of reducing the adjustability of the hinge.
Ideal case: door recess 14 mm, frame recess 4 mm (underlined).
A big radius at the door and frame is recommendable.

This drawing is our property. Any duplication, use or distribution to third parties is strictly prohibited and constitutes an infringement of copyright which will be subject to legal proceedings and compensation claims. (Copyright Law, Act against Unfair Competition, BGB). All rights reserved in case of a patent issue (§ 7 sect. 1 PatG) or a utility model protection (§ 5 sect.4 GebrMG). BaSys - Bartels Systembeschläge GmbH

Maße / Dimensions in mm			
Format	A2		
Werkstoff / Material	-		
2014	Datum / Date	Name	
gez. / drawn	14.03.	Glück	
gepr./checked	-	-	
Norm / std.	-	-	
Index	Änderung / Description of Change	Datum / Date	Name
Datei / File	dx80_ZA_04027800.PRT		

BaSys Bartels Systembeschläge GmbH
Bartels Systembeschläge GmbH
Gewerbegebiet Echternhagen 2
D-32689 Kalletal-Hohenhausen
Telefon +49 (0) 52 64 / 64 73 - 0
Telefax +49 (0) 52 64 / 64 73 - 30

Benennung / Title
cutout drawing
PIVOTA ® DX 80 3-D "ZA"

Zeichn.-Nr. / Drawing-No. -
Maßstab / Scale 1:1